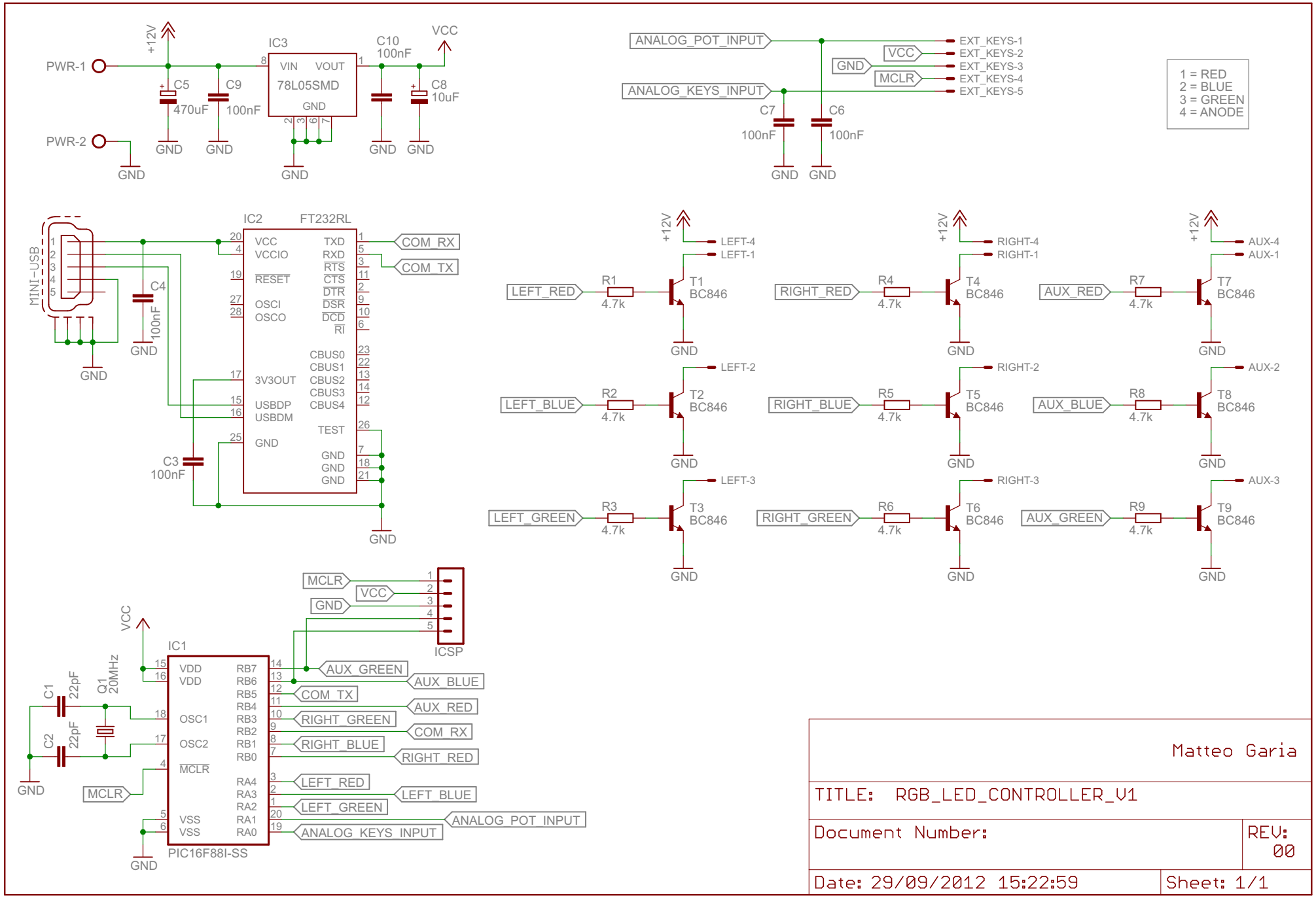
PWR-1
PWR-2
+12V
C5
470uF
C9
100nF
IC3
VIN
VOUT
78L05SMD
GND
C10
100nF
VCC
C8
10uF
GND
ANALOG_POT_INPUT
ANALOG_KEYS_INPUT
VCC
GND
MCLR
EXT_KEYS-1
EXT_KEYS-2
EXT_KEYS-3
EXT_KEYS-4
EXT_KEYS-5
C7
100nF
C6
100nF
1 = RED
2 = BLUE
3 = GREEN
4 = ANODE
MINI-USB
C4
100nF
IC2
FT232RL
VCC
VCCIO
RESET
OSCI
OSCO
3V3OUT
USBDP
USBDM
GND
TXD
RXD
RTS
CTS
DTR
DSR
DCD
RI
CBUS0
CBUS1
CBUS2
CBUS3
CBUS4
TEST
COM_RX
COM_TX
C3
100nF
LEFT_RED
RIGHT_RED
AUX_RED
LEFT_BLUE
RIGHT_BLUE
AUX_BLUE
LEFT_GREEN
RIGHT_GREEN
AUX_GREEN
R1
R2
R3
R4
R5
R6
R7
R8
R9
4.7k
T1
T2
T3
T4
T5
T6
T7
T8
T9
BC846
LEFT-1
LEFT-2
LEFT-3
LEFT-4
RIGHT-1
RIGHT-2
RIGHT-3
RIGHT-4
AUX-1
AUX-2
AUX-3
AUX-4
ICSP
MCLR
VCC
GND
IC1
VDD
VDD
OSC1
OSC2
MCLR
VSS
VSS
RB7
RB6
RB5
RB4
RB3
RB2
RB1
RB0
RA4
RA3
RA2
RA1
RA0
C1
22pF
C2
22pF
Q1
20MHz
PIC16F88I-SS
AUX_GREEN
AUX_BLUE
COM_TX
AUX_RED
RIGHT_GREEN
COM_RX
RIGHT_BLUE
RIGHT_RED
LEFT_RED
LEFT_BLUE
LEFT_GREEN
ANALOG_POT_INPUT
ANALOG_KEYS_INPUT
Matteo Garia
TITLE: RGB_LED_CONTROLLER_V1
Document Number:
REV: 00
Date: 29/09/2012 15:22:59
Sheet: 1/1