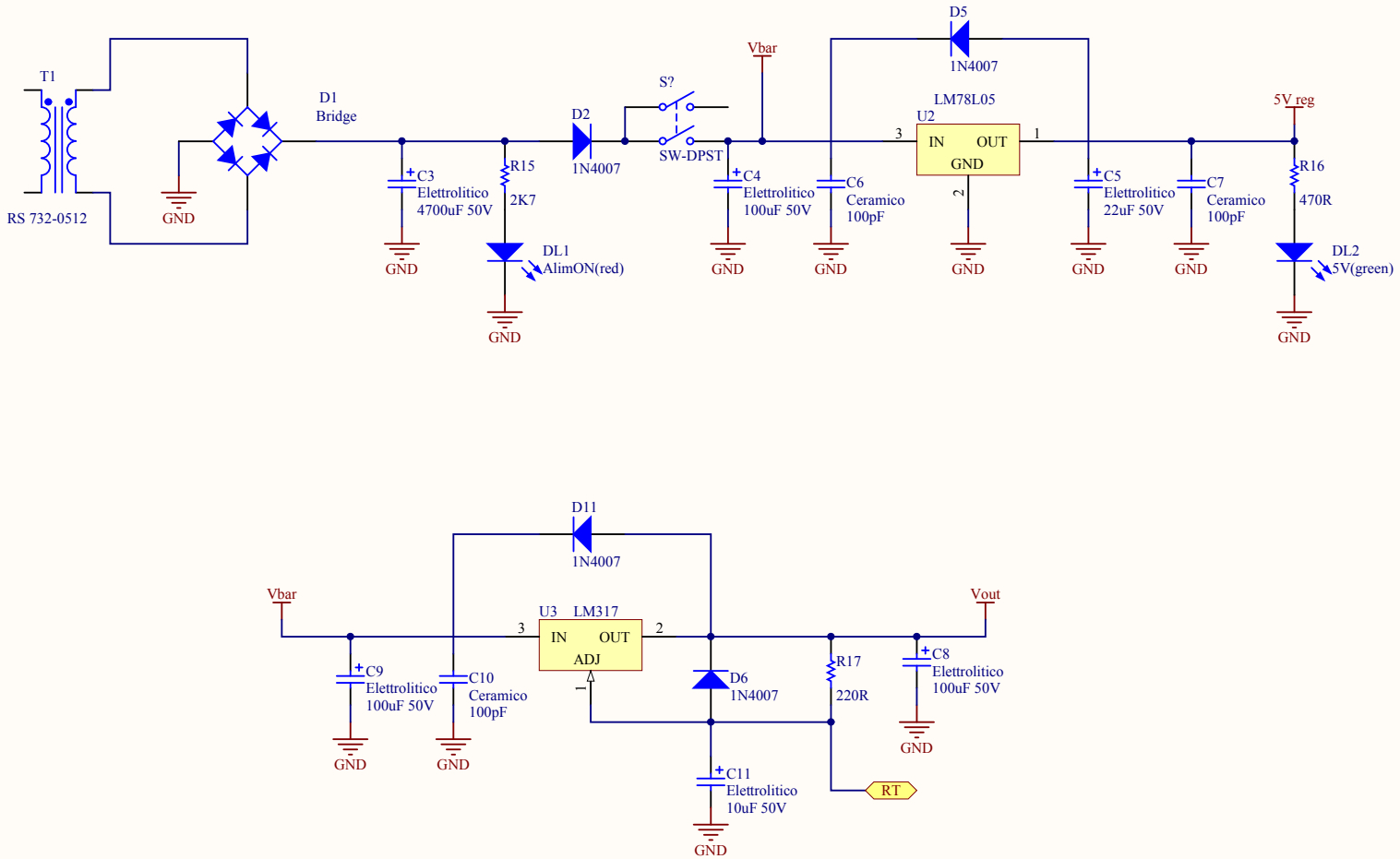

Title		
Size A4	Number	Revision
Date: 03/02/2012		Sheet of
File: F:\A001R0_Alimentatore\..A001R0_Power.SchDoc		Drawn By: