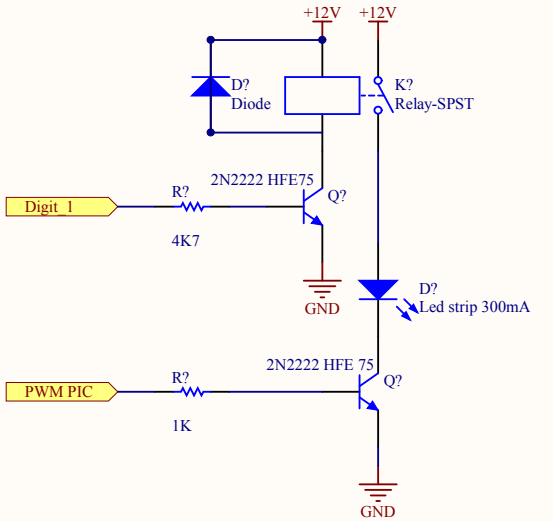


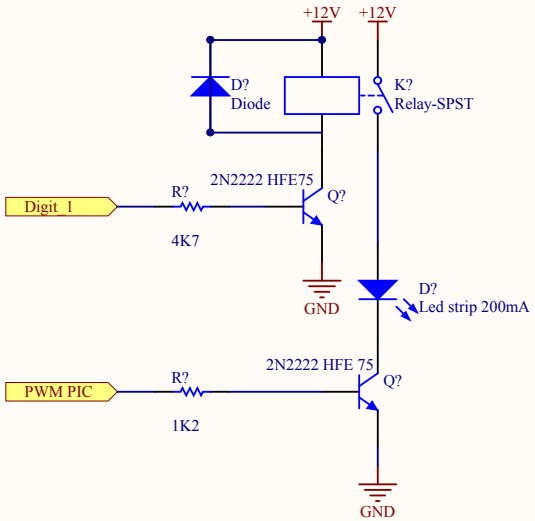


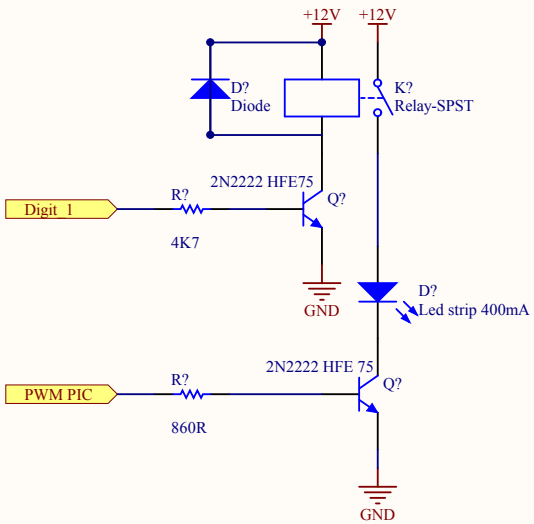


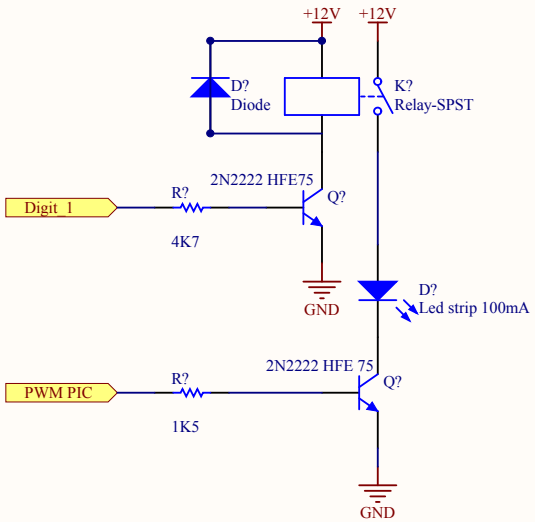


| | | |
|---|---|---|
| Title | | |
| Size A4 | Number | Revision |
| Date: 07/02/2012 | | Sheet of |
| File: C:\Users\Ricky\Desktop\Sheet1.SchDoc | | Drawn By: |